Series 1 & 2

Miniature Inert PTFE Isolation Valves

2-Way and 3-Way Solenoid Valves

The 2-Way & 3-Way inert Series 1 & 2 valves have been designed for systems where chemical compatibility is most important. The wetted path is isolated from the solenoid and only Teflon® (PTFE) and borosilicate glass are in contact with the media passing through the valve. Low internal volume and fast response time ensure repeatable, accurate volumes. Valves will actuate without any pressure or vacuum applied.

Features

- Provides unsurpassed chemical compatibility for a wide range of media with Teflon® (PTFE and borosilicate glass as the only wetted parts
- 100% continuous duty rating in ambient temperatures up to 66°C
- Low power for reduced heat generation and power consumption
- Fast response times for accurate repeatable results
- Direct acting: does not require pressure or vacuum to operate
- 100% tested leak rate provides assurance of a quality seal
- Provides reliable operation for the life of your instrument
- RoHS compliant

Typical Applications

- Reagent Control
- Solvent Management
- Aggressive Liquid Control

Product Specifications

Physical Properties

Valve Type:
Diaphragm Isolation Valve
Valve Configuration:
3-Way (Series 1)
2-Way, Normally Closed (Series 2)
Media:
Liquids
Operating Environment:
40 to 150°F (4 to 66°C)
Dimensions:
Width: 1.0” (25.4 mm)
Height: 2.1” (53.34 mm)
Length: 1.0”(25.4 mm)
Porting:
1/4-28 Threaded Ports
Weight:
2.7 oz (76.5 g)
Internal Volume (µL):
96 (3-Way)
49 (2-Way)

Electrical

Voltage (VDC):	12	24
Power (Watts):	2.5	4.2
Current (mA):	211	173
Resistance (Ohm):	57	139
(Ω±5% @ 70°F, 21.1°C)		
Connections:		
12” Lead Wire Standard		
26 AWG, PTFE Insulated		

Wetted Materials*

Seals:
Teflon® (PTFE)
Body Options:
Teflon® (PTFE)
All Others:
Borosilicate Glass (3 - Way only)

* See Chemical Compatibility Page
Consult factory for other options

Performance Characteristics

Operating Pressure/ Orifice Diameters:
Vacuum - 20 psig (1.4 bar) / 0.060” (1.52 mm)
Proof Pressure:
1.5X rated pressure
Leak Rate:
Bubble Tight
Response Time:
3-Way: <12 ms cycling
2-Way: <20 ms cycling
Recommended Filtration:
10 µm min
Reliability:
Life Cycle Rating of 10 million (Application dependent)

Series 1 & 2 Miniature Inert PTFE Isolation Valves

Typical Flow Curve

All Models
Orifice: 0.060" (1.52 mm)
(Tested w/water 24° C)

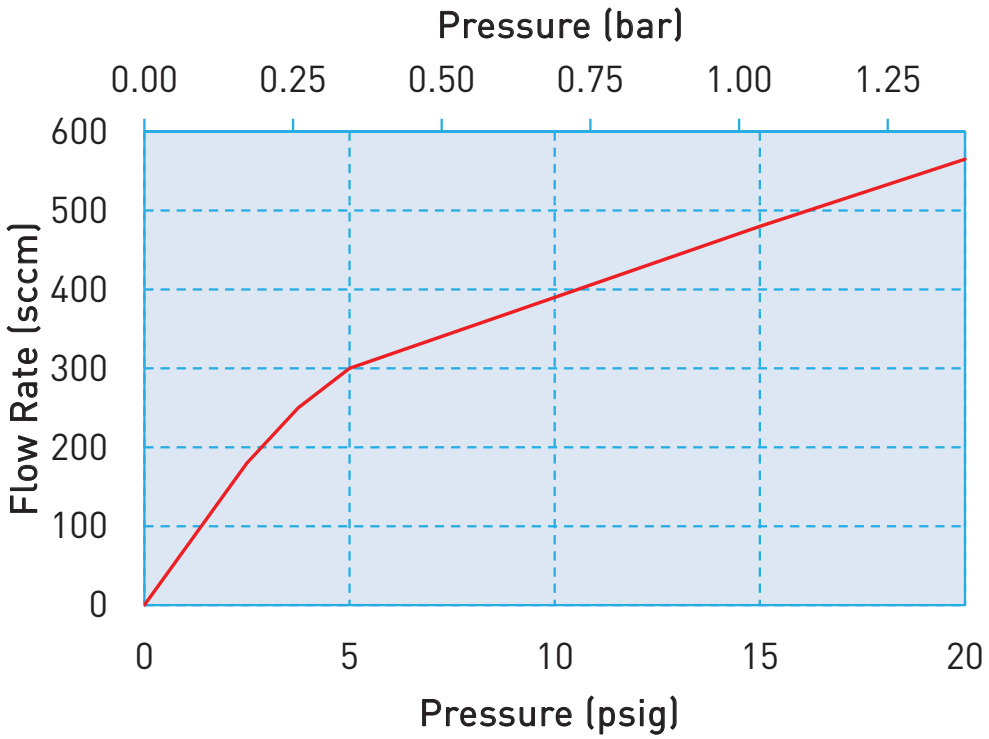

Series 1 & 2 Miniature Inert PTFE Isolation Valves

Electrical Interface

Series 1: 3-Way
Coil Type: Wire leads

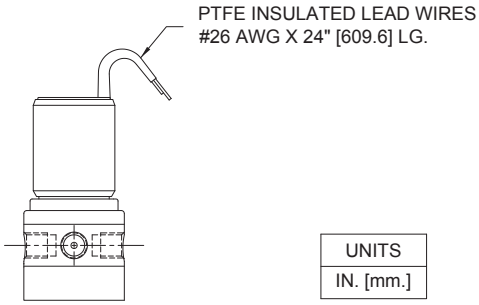

UNITS
IN. [mm.]

Custom connections available upon request

Mechanical Integration

Dimensions

Series 1: 3-Way Cross-Section
Wetted Material and Dimensions

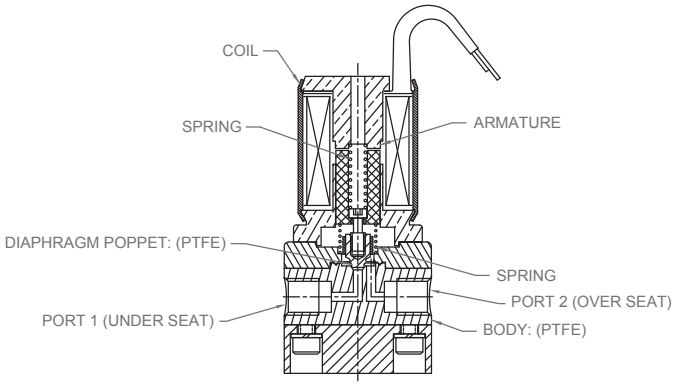

3-Way, 0.060” (1.52 mm) Orifice

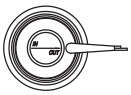

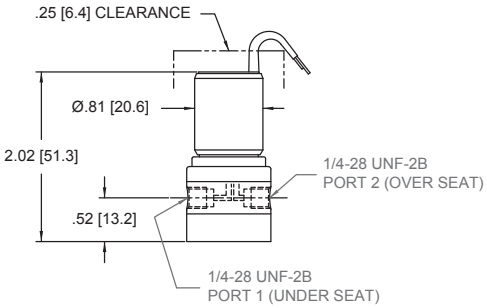

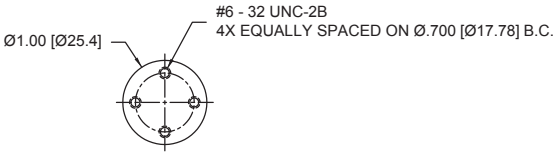

BOTTOM VIEW

UNITS
IN. [mm.]

Series 1 & 2 Miniature Inert PTFE Isolation Valves

Electrical Interface

Series 2: 2-Way
Coil Type: Wire leads

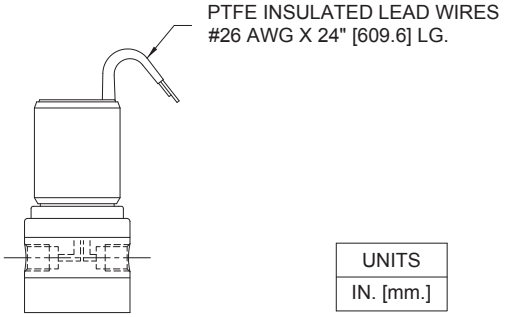

UNITS
IN. [mm.]

Custom connections available upon request

Mechanical Integration

Dimensions

Series 2: 2-Way Cross-Section
Wetted Material and Dimensions

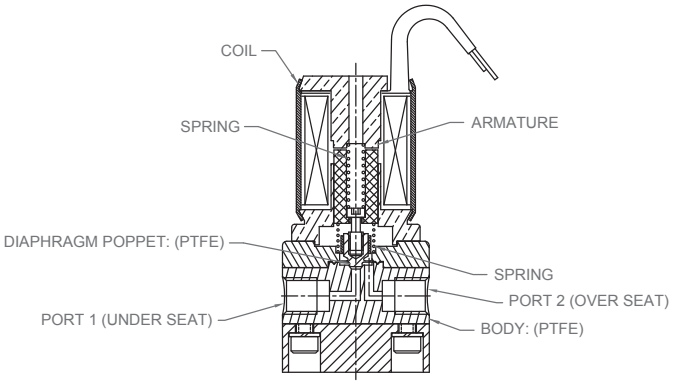

2-Way, 0.060" (1.52 mm) Orifice

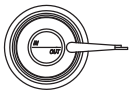

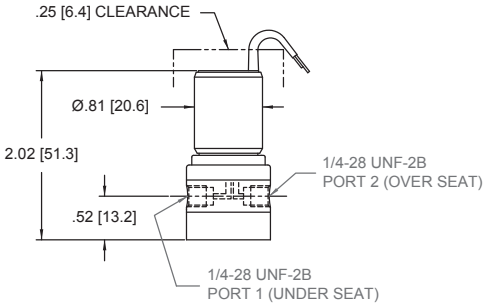

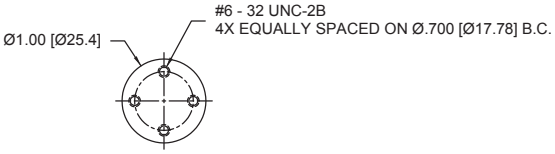

UNITS
IN. [mm.]

Series 1 & 2 Miniature Inert PTFE Isolation Valves

ANSI Symbols

Series 1

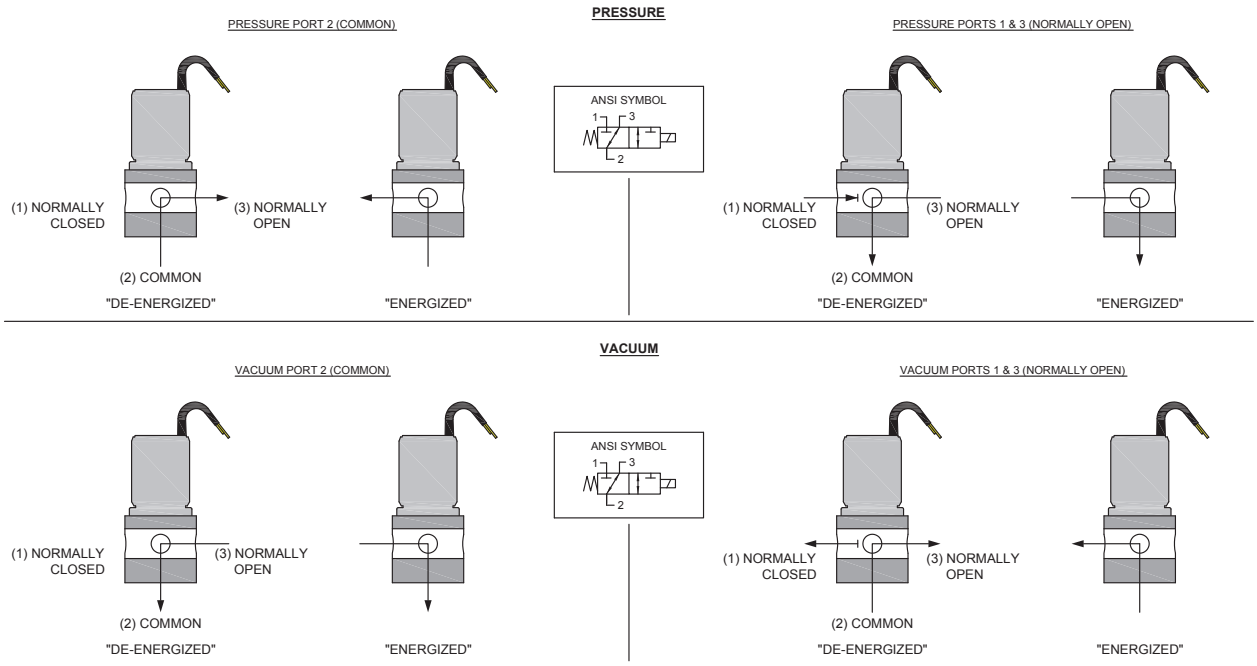

Series 2

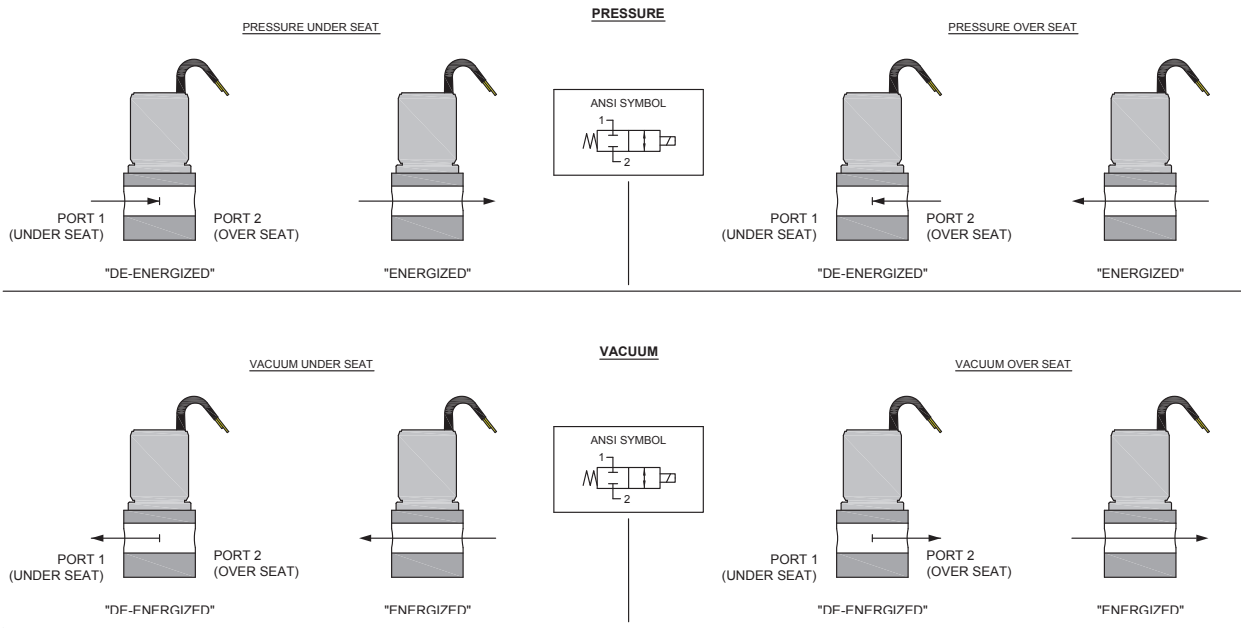

Series 1 & 2 Miniature Inert PTFE Isolation Valves

Hit and Hold Specifications

Hit and Hold is a method for driving valves that can be used to reduce power consumption and heat generation while maintaining valve performance specifications. The valve is "hit" with the full rated voltage for some time period to open it (T1 in the graph) and then "held" open with substantially reduced voltage until the desired pulse length is reached (T2 in the graph). The following table shows the possible holding voltages and power consumption for our standard 12 and 24 VDC solenoids.

Rated Voltage (volts)	*3-way*		*2-way*	
	Hold Voltage	*Hold Power*	*Hold Voltage*	*Hold Power*
24	12 volts	1.04 watts	8 volts	0.46 watts
12	6 volts	0.63 watts	5 volts	0.44 watts

Note: Other voltages available

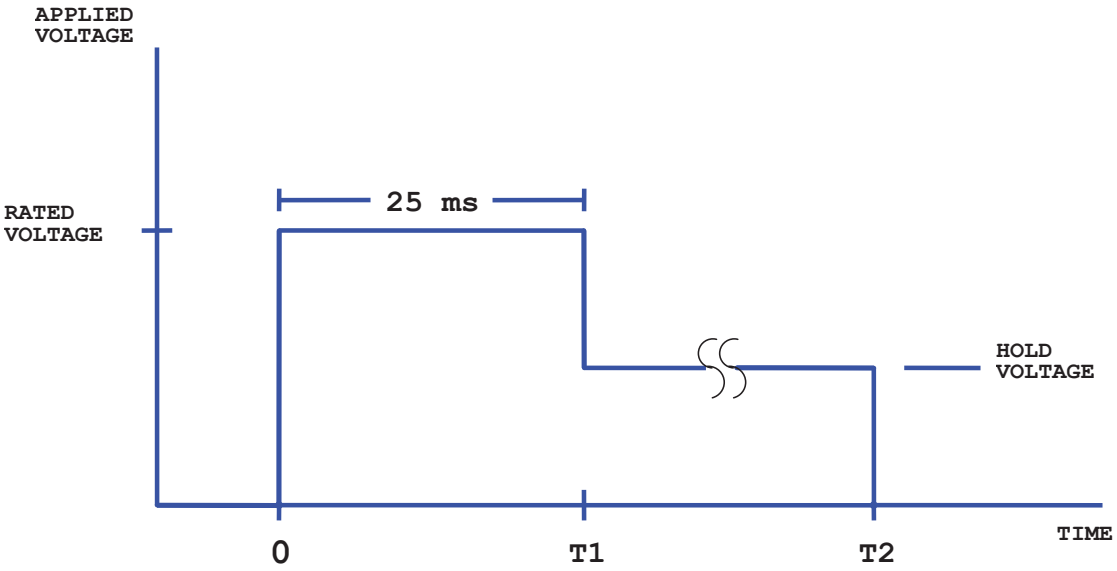

Hold Voltage Graph

Series 1 & 2 Miniature Inert PTFE Isolation Valves

Chemical Compatibility Chart*

	Diaphragm and Body	Other Wetted Materials
Chemical	PTFE	Borosilicate Glass (3-way version only)
DI Water	1	1
Methanol	1	1
Isopropanol	1	1
Ethanol	1	1
Acetonitrile	1	1
Tetrahydrofuran	1	1
Toluene	1	4
Organic Acids - Dilute	1	1
Non Organic Acids - Dilute	1	1
Bases - Dilute	1	1
Saline	1	1
Bleach 12%	1	1
Sodium Hydroxide 20%	1	4

*The above is an Abbreviated Chemical Compatibility Chart. Please consult factory for a complete list.

COMPATIBILITY LEGEND		
1	EXCELLENT	Minimal or no effect
2	GOOD	Possible swelling and/or loss of physical properties
3	DOUBTFUL	Moderate or severe swelling and loss of physical properties
4	NOT RECOMMENDED	Severe effect and should not be considered

Typical Flow Diagram

Air Pressure Over Reagent

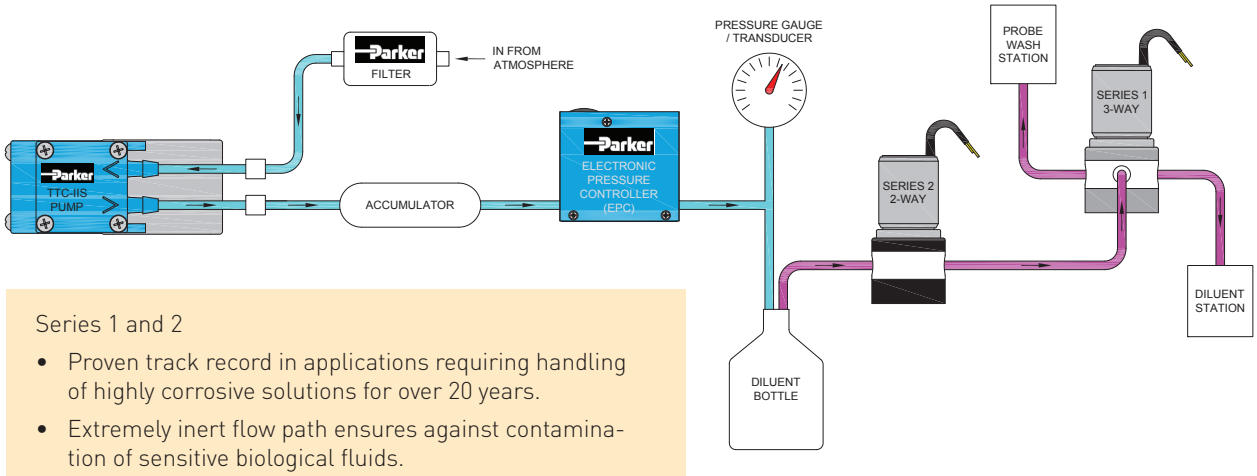

Series 1 and 2

- Proven track record in applications requiring handling of highly corrosive solutions for over 20 years.
- Extremely inert flow path ensures against contamination of sensitive biological fluids.
- Low internal volume reduces carryover and sample/reagent waste.

Highlight test results when available.

Series 1 & 2 Miniature Inert PTFE Isolation Valves

Ordering Information

Orifice Size	Pressure	Seal Material	Valve Type	Voltage	Porting	Part Number
0.060"(1.52mm)	Vac-20psig (1.38 bar)	PTFE	3-Way	12V	1/4"-28	001-0017-900
				24V	1/4"-28	001-0028-900
		PTFE	2-Way NC	12V	1/4"-28	002-0017-900
				24V	1/4"-28	002-0010-900

NOTE: In order to provide the best possible solution for your application, please provide the following requirements when contacting Applications Engineering:

- Media, Inlet & Outlet Pressures
- Minimum Required Flow Rate
- System Supply Voltage
- Media
- Ambient Temperature Range

Please click on the Order On-line button (or go to www.parker.com/precisionfluidics/series1and2) to configure your Series 1 and 2 Miniature Inert PTFE Isolation Valve. For more detailed information, visit us on the Web, or call 603-595-1500.

For more information call +1 603 595 1500 or email ppfinfo@parker.com
Visit www.parker.com/precisionfluidics